ROMANOFF
INTERNATIONAL SUPPLY CORPORATION

Romanoff International Supply Corporation
9 Deforest Street
Amityville, NY 11701
USA

800.221.7448 (Toll Free-USA Only)
631.842.0028 (Fax)
E-mail: Sales@romanoff.com

1. Purpose

The purpose of this document is to describe in detail the procedure for replacement of RTD and heater cable assemblies on reservoirs.

2. Background

ECO 1573 has created replacement heater kits for reservoir heaters that need to be replaced. Each kit includes all of the parts needed to replace failed heaters. ***A primary requirement is that if one of the heaters is replaced, then all of the heaters on the same reservoir must be replaced.*** This ensures that the proper upper and lower heaters and associated parts are installed on a reservoir.

3. Scope

This procedure is applicable to all service supported machines.

4. Associated documents

MP-0047 MMII & PM Tank Height Adjustment Procedure
MP-0091 T6X Tank Height adjustment Procedure
All of the drawings attached.

5. Required Tools & Materials

Phillips head screwdriver
Flat blade screwdriver
Hammer
Metric sockets and socket wrench
Metric allen wrenches
One or more of the RTD assemblies or heater kits listed in the following table:

Reservoir Type	RTD Assembly Number	Heater Replacement Kit
MMII, PM, Build or Support	910059	890136
T6X Build	910172	890137
T6X Support	910173	890138
R66 D66 Build	910203	890139
R66 D66 Support	910206	890140
T2 Build	910172	890141
T2 Support	910173	890142

Note: All of the parts in Heater Replacement Kits may not be used for some assemblies.

ROMANOFF
INTERNATIONAL SUPPLY CORPORATION

Romanoff International Supply Corporation
9 Deforest Street
Amityville, NY 11701
USA

800.221.7448 (Toll Free-USA Only)
631.842.0028 (Fax)
E-mail: Sales@romanoff.com

Caution: *You may be burnt on the exposed reservoir surfaces or hot fluid material if you do not allow the reservoirs to cool to room temperature before you start to disassemble the machine. The power must also be off to ensure there is no electrical shock hazard.*

6. Procedure

6.1

The reservoir assembly must be removed from the machine for heater or RTD assembly replacement. Power the machine down that requires reservoir lower heaters or RTD's replacement. Allow the reservoirs to cool to room temperature. Remove the rear, left and front covers of the machine. Loosen hardware that will allow the reservoir assembly to be pulled from the machine (mounting bracket(s) included). Removing the bracket that holds the reservoirs to the chassis should also be removed for easy replacement of the RTD's or heaters. Remove the electronics side cover and disconnect the connectors of the cables that come from the reservoir(s) from the mother board. Some build reservoir RTD assemblies have an RTD mounted to the reservoir and an additional RTD mounted to the exhaust fan accessed from the front of the machine. The RTD attached to the fan must be removed from the fan to allow the reservoir(s) to be removed. Both reservoirs have to be removed at the same time for some machine types. Remove the reservoir assembly from the machine. ***Note the routing of the cable assemblies through the chassis and around the reservoirs as the reservoir is removed so you can repeat it during reassembly in a later step.***

6.2

Slide the reservoir mounting bracket and insulation from the reservoir(s) to expose the bottom of the reservoirs. Disconnect the upper heater connector from the lower heater assembly. ***Note the routing of the RTD cable assembly to be replaced.*** Remove any RTD's to be replaced and install its replacement(s) with the appropriate RTD cable assembly to the bottom of the reservoir. ***Ensure that it is secured like the one it replaced, and routed the same way.***

ROMANOFF
INTERNATIONAL SUPPLY CORPORATION

Romanoff International Supply Corporation
9 Deforest Street
Amityville, NY 11701
USA

800.221.7448 (Toll Free-USA Only)
631.842.0028 (Fax)
E-mail: Sales@romanoff.com

6.3

This step covers upper heater replacement. All upper heaters are press fitted into a slot in the upper heater bracket. Note the routing of the upper heater cabling so you can repeat it during reassembly in a later step. Remove the heater from the upper heater bracket by prying them out of the slots they are mounted in. Use a flat blade screw driver to pry the heater up out of slot. You might have to use a hammer to get the blade of the screw driver started between the bottom of the slot and the bottom of the heater, if the heater has adhered to the bracket. Clear any debris off of the side walls of the slot to ensure proper contact to the new heater. Ensure not to damage the slot side walls when this is done. Press the new upper heater into the slots with the ***same cable routing*** as the old heaters. Press the heater in simultaneously with steel shims (0.003" thick and 0.005" thick that come with the kit) between the heater and one of the slot side walls, ***if the heater is loose in the slot***. A heater is considered loose if you can move an installed heater with a force of about 0.5 pounds on its lead wires. The shims are sized to mate on either of the largest faces of the heater jacket. Use one, or both of the shims, if needed, to provide a light press fit condition between the heater and the slot. Use the flat edge of a ¼" thick piece of aluminum to press the heater in place. The length of the aluminum should be at least as long as the heater itself. This should be done to ensure that the jacket of the heater is not punctured.

6.4

This step covers lower heater replacement on small reservoirs used on R66, D66, T6XT2 and T612T2 units. These reservoirs are about 4.5 inches tall, and have the lower heaters press fitted into two slots located on the bottom of the reservoir. Note the routing of the lower heater cabling before disassembly. Remove the hardware that secures the ground lug, if one is attached to the bottom of the reservoir. Lower heaters are pressed into slots located on the bottom of the reservoir. Remove the heaters from reservoirs by prying them out of the slots they are mounted in. Use a flat blade screw driver to pry the heater up out of the reservoir slots of small reservoirs. You might have to use a hammer to get the blade of the screw driver started between the bottom of the slot and the bottom of the heater, if the heater has adhered to the bracket. Clear any debris off of the side walls of the slot to ensure proper contact to the new heater. Ensure not to damage the slot side walls when this is done. Press the new heaters into the slots with the ***same cable routing*** as the old heaters. Press the heater in simultaneously with steel shims (0.003" thick and 0.005" thick that come with the kit) between the heater and the slot side wall, ***if the heater is loose in the slot***. A heater is considered loose if you can move an installed heater with a force of about 0.5 pounds on its lead wires. The shims are sized to mate on either of the largest faces of the heater jacket. Use one, or both of the shims, if needed, to provide a light press fit condition between the heater and the slot. Use the flat edge of a ¼" thick piece of aluminum to press the heater in place. The length of the aluminum should be at least as long as the heater itself. This should be done to ensure that the jacket of the heater is not punctured.

ROMANOFF
INTERNATIONAL SUPPLY CORPORATION

Romanoff International Supply Corporation
9 Deforest Street
Amityville, NY 11701
USA

800.221.7448 (Toll Free-USA Only)
631.842.0028 (Fax)
E-mail: Sales@romanoff.com

6.5

This step covers lower heater replacement on large reservoirs used on MMII, PM, T66, T66-T1, T612,T6XBT, and T612BTunits. These reservoirs are about 9.25 inches tall, and have their lower heaters secured to the bottom of the reservoir with u-shaped brackets. Note the routing of the lower heater cabling. Remove the hardware that secures the ground lug, if one is attached to the bottom of the reservoir. Remove the heater brackets that secure the heaters to the bottom of the reservoir. Use a flat blade screw driver to clean the surface that the heater contacts to ensure proper contact to the new heater. Ensure not to damage the surface when this is done. Install the new heaters using the two 700384 u-shaped brackets that come in the replacement kit. This is necessary for proper temperature control. The 700384 brackets are also designed to mount any heater without the use of shims. The heater cables must be routed the same as the replaced cables.

6.6

Slide the reservoir bracket and insulation back over the reservoirs, routing the wires as originally found on the reservoir assembly itself. This includes reconnection of the lower heater to upper heater connectors and reinstallation of the covers.930086 Floor insulation assembly (made of yellow fiberglass) was originally used on Patternmaster and ModelMaker II reservoirs. Heater replacement kit 890136 contains two 720246 pieces of rigid insulation (6" x 2" x 0.375") that can be used to replace the 930086 insulation that the reservoir sits on. Reinstall the reservoir assembly, routing all of the wiring as originally found through the chassis. Set the tank height prior to reinstallation of the rear cover per MP-0047 (for MMII PM machines), MP-0091 (for T6X machines), or drawing sheets attached to the end of this procedure (correct as of 11/9/07). The drawings include 930206-04 Rev B (T6XT2 and T612T2 machines) and 930356 Rev D (for R66 D66 machines)

Solidscape	Title: RESERVOIR HEATER &RTD REPLACEMENT	Date: 6/20/08	Rev: D	Page: 5 of 6	Document No: STB-050

NOTES:
1. APPLICABLE STANDARDS/SPECIFICATIONS
   ANSI Y14.5M-1982, DIMENSIONS AND TOLERANCES
   MIL-STD-12, ABBREVIATIONS
2. FINISHED PRODUCT MUST BE EU 2002/95/EC (RoHS) COMPLIANT

INFORMATION CONTAINED HEREIN IS THE PROPERTY OF SOLIDSCAPE, INC. AND MAY NOT BE USED IN ANY WAY WITHOUT THE PRIOR WRITTEN PERMISSION OBTAINED FORM SOLIDSCAPE, INC.

REVISIONS

ZONE	REV	DESCRIPTION	DATE	APPROVED
	E	ECO1577, ADD 600019, 810022-3040 WAS 810021-28	10/29/07	

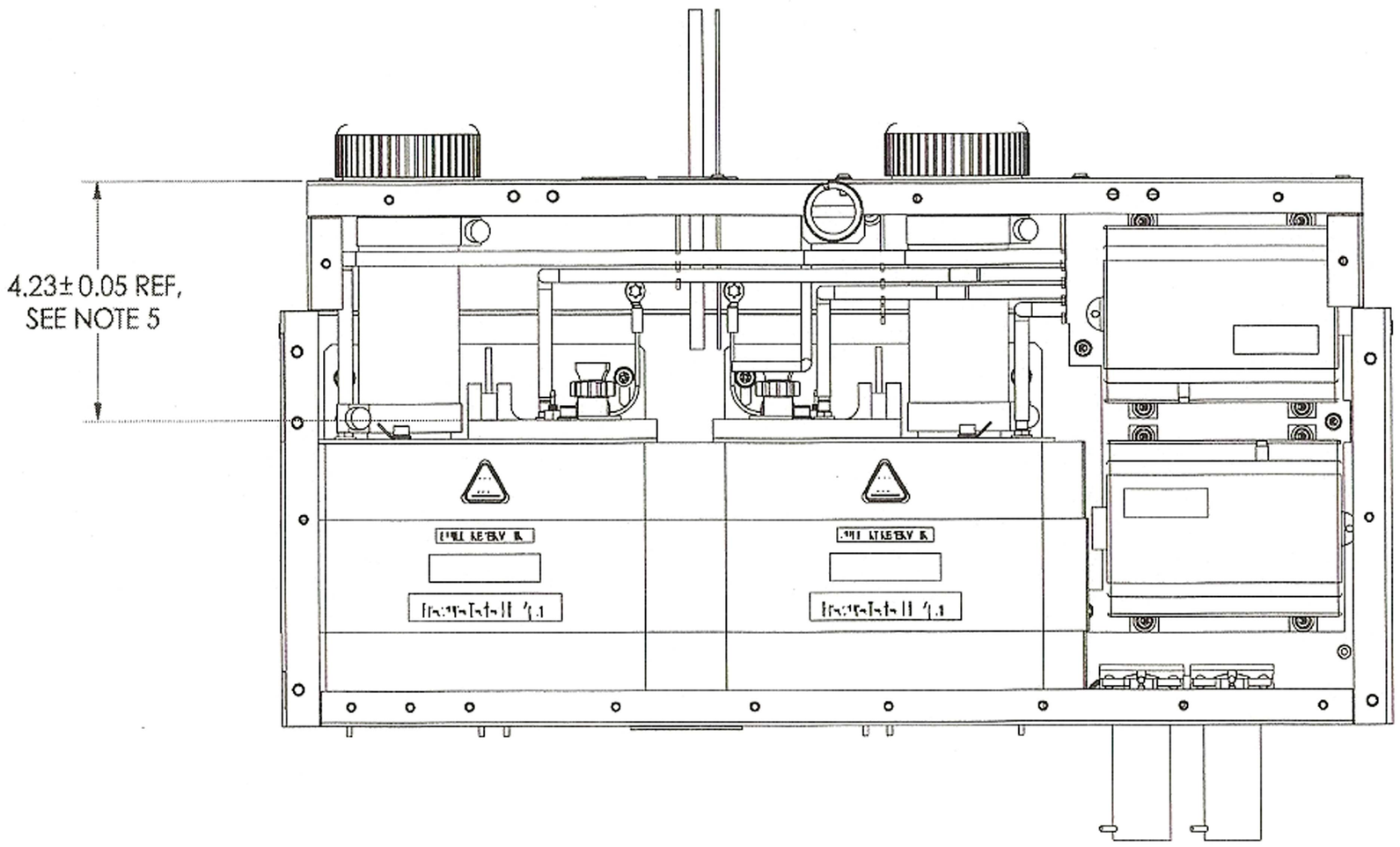

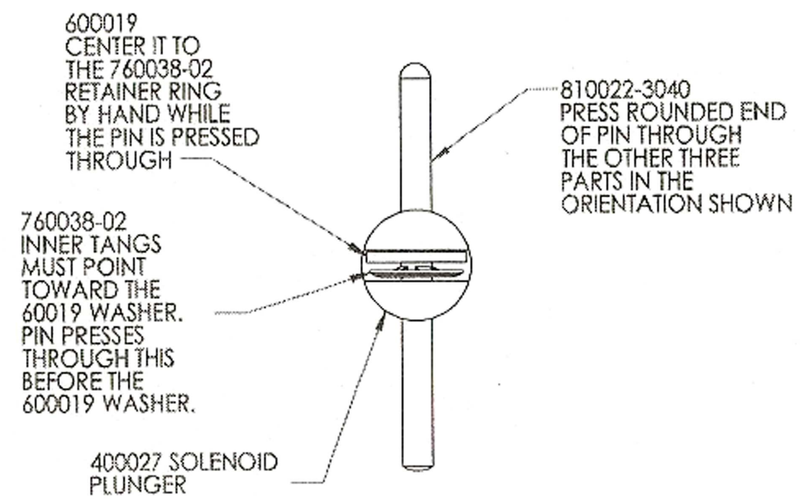

810022-0340 INSTALL DETAIL
(TOP VIEW OF THE SOLENOID PLUNGER)

UNLESS OTHERWISE SPECIFIED:
DIMENSIONS ARE IN INCHES
TOLERANCES ARE:
FRACTIONAL ±1/64
ANGULAR: ±1/2°
.XX ±.01
.XXX ±.005
.XXXX ±.0005

MATERIAL

TREATMENT

DO NOT SCALE DRAWING

CONTRACT NO.

APPROVALS	NAME	DATE
DRAWN	DBB	1/24/07
DESIGN ACTIVITY	FH	10/29/07
MFG APPR.		
Q.A.		

COMMENTS:

SOLIDSCAPE, INC
MERRIMACK, NH 03054
TEL: (603)429-9700 FAX: (603)424-1850

TITLE: ASSY, RES PANEL T76

SIZE C | DWG. NO. 930356 | REV E

SCALE: 1:2 | WEIGHT: | SHEET 2 OF 2

ROMANOFF
INTERNATIONAL SUPPLY CORPORATION

Romanoff International Supply Corporation
9 Deforest Street
Amityville, NY 11701
USA
800.221.7448 (Toll Free-USA Only)
631.842.0028 (Fax)
E-mail: Sales@romanoff.com

Solidscape	Title: RESERVOIR HEATER &RTD REPLACEMENT	Date: 6/20/08	Rev: D	Page: 6 of 6	Document No: STB-050

NOTES:
1. APPLICABLE STANDARDS/SPECIFICATIONS:
   ANSI Y14.5M-1982, DIMENSIONS AND TOLERANCES
   MIL-STD-12, ABBREVIATIONS
2. DO NOT SCALE DRAWING.
3. FINISHED PRODUCT MUST BE EU 2002/95/EC (RoHS) COMPLIANT

INFORMATION CONTAINED HEREIN IS THE PROPERTY OF SOLIDSCAPE, INC. AND MAY NOT BE USED IN ANY WAY WITHOUT PRIOR WRITTEN PERMISSION OBTAINED FROM SOLIDSCAPE, INC.

REVISIONS				
ZONE	REV	DESCRIPTION	DATE	APPROVED
	B	ECO 1467		

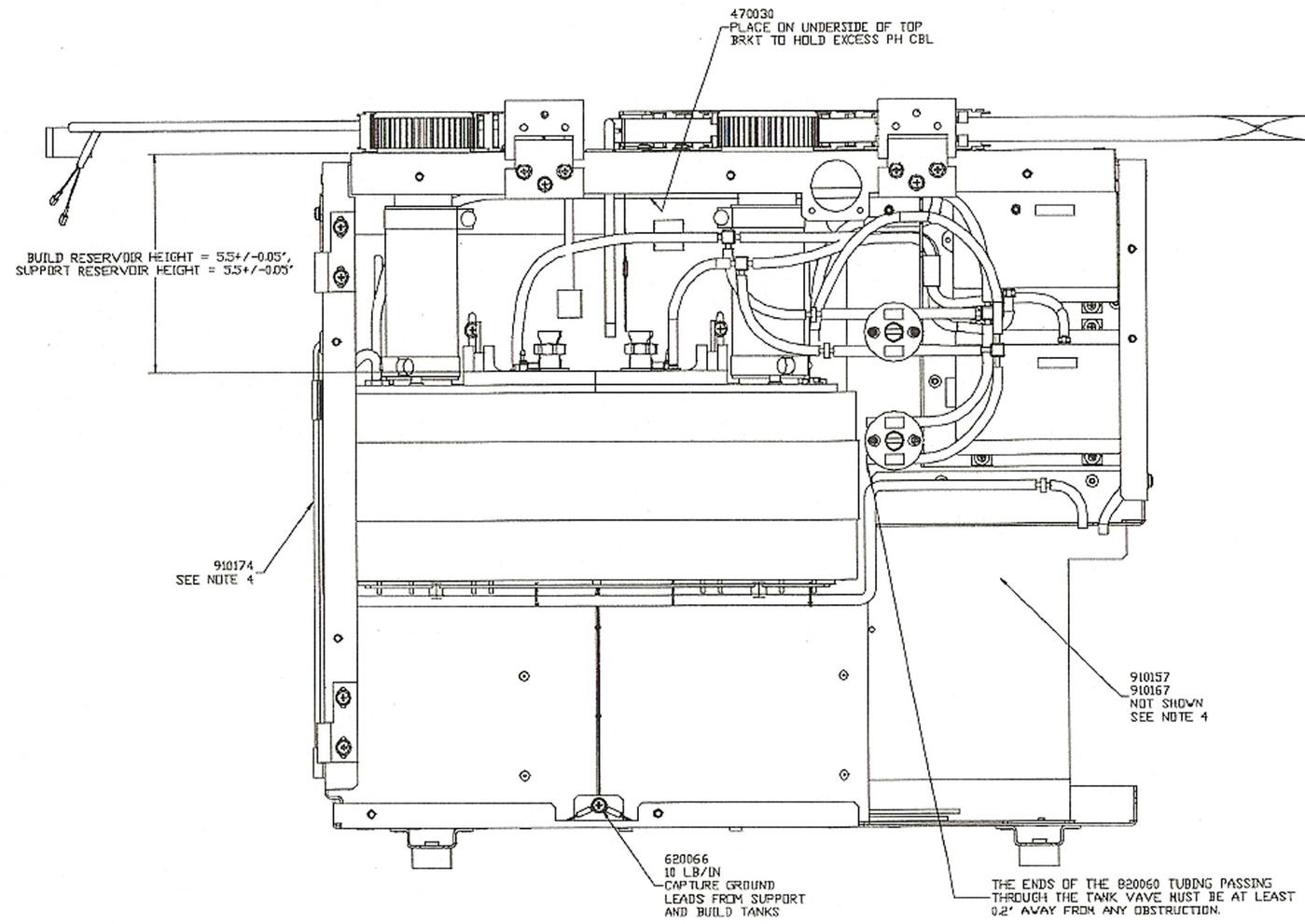

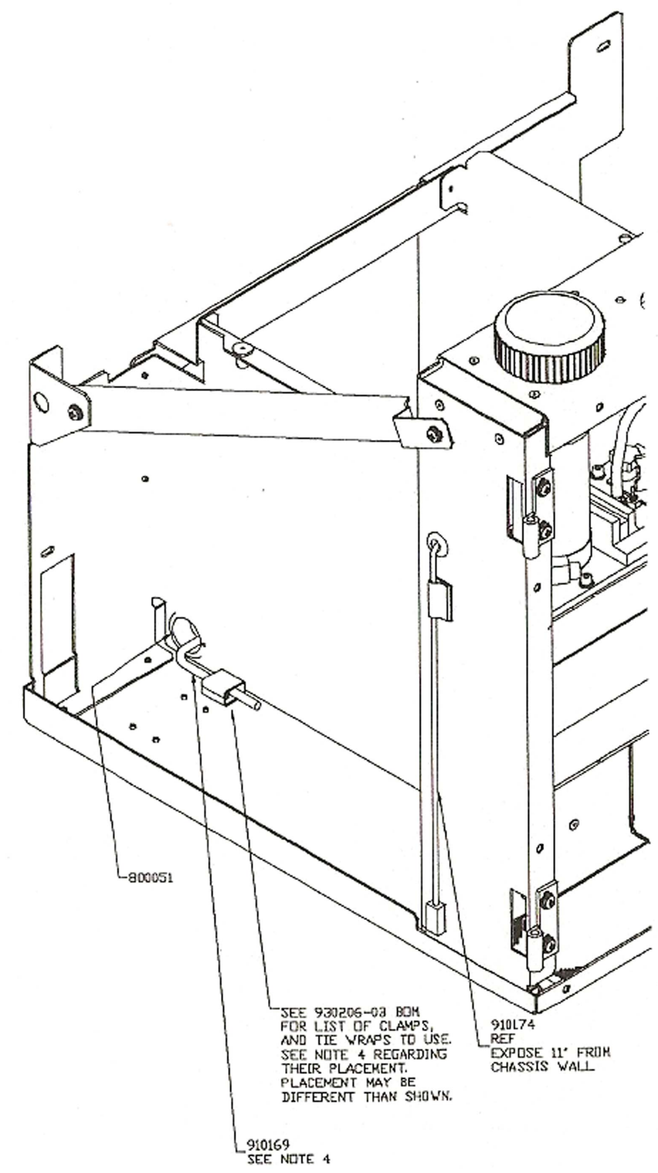

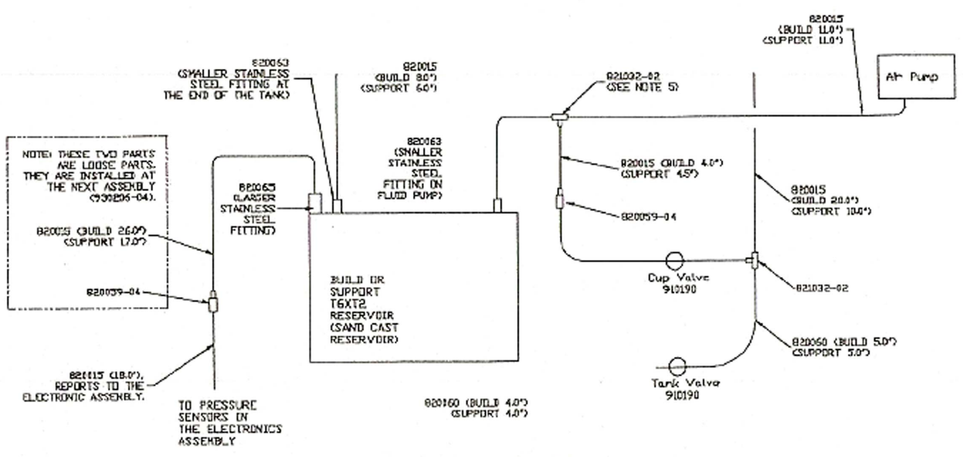

T6XT2 TUBING SCHEMATIC
(TYPICAL FOR BOTH RESERVOIRS)

UNLESS OTHERWISE SPECIFIED DIMENSIONS ARE IN INCHES TOLERANCES ARE: FRACTIONS ±1/64, DECIMALS .XX ±.01, .XXX ±.005, .XXXX ±.0005, ANGLES ±0°30'	CONTRACT NO.		SOLIDSCAPE INC TEL (607)432-9730 FAX: 5053424-1580
MATERIAL	APPROVALS	DATE	TITLE ASSY, CHASSIS/RESERVOIR T6XT2
TREATMENT	DRAWN F HEROD	4/12/07	
FINISH	DESIGN ACTIVITY F HEROD	4/12/07	
	QUALITY ASSURANCE		SIZE D / CAGE CODE / DWG. NO. 930206-04 / REV. B
	MANUFACTURING ENGRG		SCALE: 1/2 / DATE 21 / ASL NO. / SHEET: 3 OF 3

ROMANOFF INTERNATIONAL SUPPLY CORPORATION
Romanoff International Supply Corporation
9 Deforest Street
Amityville, NY 11701
USA
800.221.7448 (Toll Free-USA Only)
631.842.0028 (Fax)
E-mail: Sales@romanoff.com